正式	開模	設變	估價	參考
●				

HISTORY X COUNT	DATE	ECN NO.	REV.	REVISION	SIGN.
1	APR/15/08		A	圖面重繪。	Chris

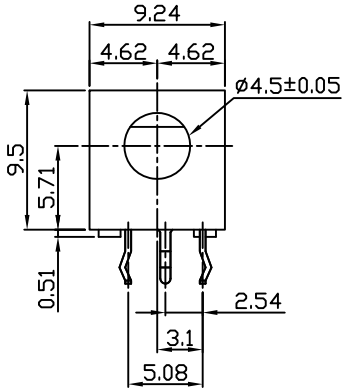

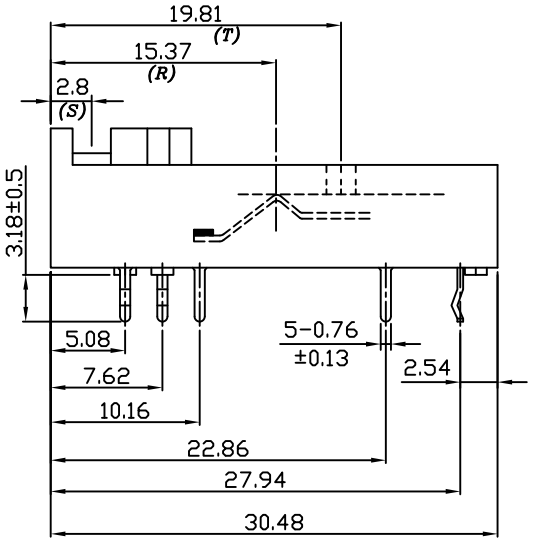

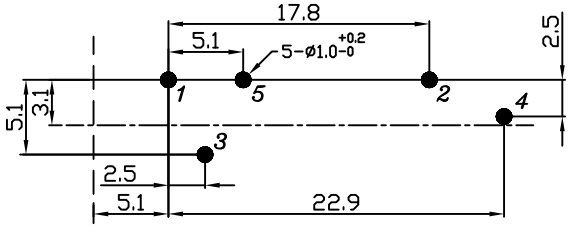

P.C.B LAYOUT(±0.1)
(BOTTOM VIEW)

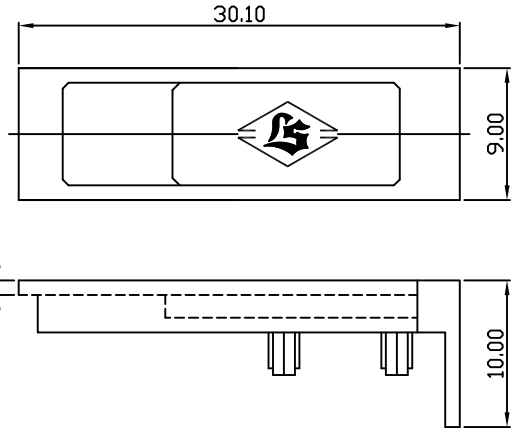

PLUG

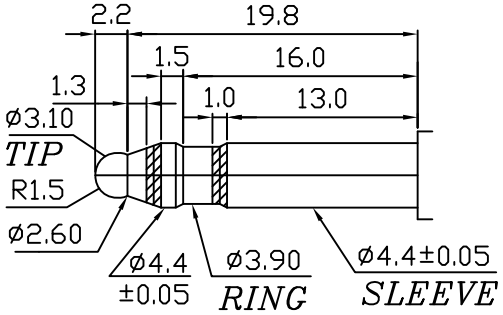

-G5

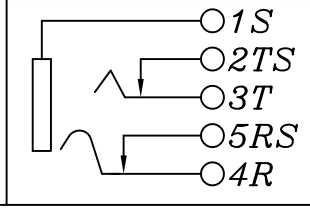

NO	PART NAME	Q'TY	MATERIAL	PLATED	REMARK
7	COVER	1	PBT-94V0 G15		BLACK
6	HOUSING	1	PBT-94V0 G15		BLACK
5	RING SHOUNT	1	P.B.S	GOLD 2u"	
4	RING	1	P.B.S	GOLD 2u"	
3	TIP	1	P.B.S	GOLD 2u"	
2	TIP SHUNT	1	P.B.S	GOLD 2u"	
1	SLEEVE	1	P.B.S	GOLD 2u"	

LIH SHENG PRECISION INDUSTRIAL CO., LTD.

TOLERANCE X. ±0.5	Material		PART NAME	MINI TELEPHONE JACK	
X.X ±0.3	Thickness		PART NO.	LJA0451-G5	
X.XX ±0.15	Disposal		DATE	05/22/87'	REV:A
	UNIT	SCALE	DRAW	CHECK	APPROVED
	mm	2:1	Chris	Jacky	Ken